Parts List				
ITEM	QTY	PART No.	TITLE	WEBLINK
1	1	PA0049	D-Handle	http://e-sea.bluelogic.no/main.aspx?page=article&artno=PA0049
2	1	BA7347	Lock for Stab	http://e-sea.bluelogic.no/main.aspx?page=article&artno=BA7347
3	1	BA5216	D-handle assy Ø150 Press Stab	http://e-sea.bluelogic.no/main.aspx?page=article&artno=BA5216
4	1	BA5211	J-Lock Bolt Ø150	http://e-sea.bluelogic.no/main.aspx?page=article&artno=BA5211
5	1	BA5210	Bolt for D-handle	http://e-sea.bluelogic.no/main.aspx?page=article&artno=BA5210
6	1	BA5205	ROV Handle for Ø150 SP Stab Welding assy	http://e-sea.bluelogic.no/main.aspx?page=article&artno=BA5205
7	1	BA5201	ROV Handle Bracket Ø150	http://e-sea.bluelogic.no/main.aspx?page=article&artno=BA5201
8	1	BA3544	Guide Nose Ø150	http://e-sea.bluelogic.no/main.aspx?page=article&artno=BA3544
9	1	BA2958	Lock Bolt for D-Handle	http://e-sea.bluelogic.no/main.aspx?page=article&artno=BA2958
10	1	BA1823	J-Lock Bolt	http://e-sea.bluelogic.no/main.aspx?page=article&artno=BA1823
12	1	101310	O-Ring	
11	1	105507	Stab Seal	

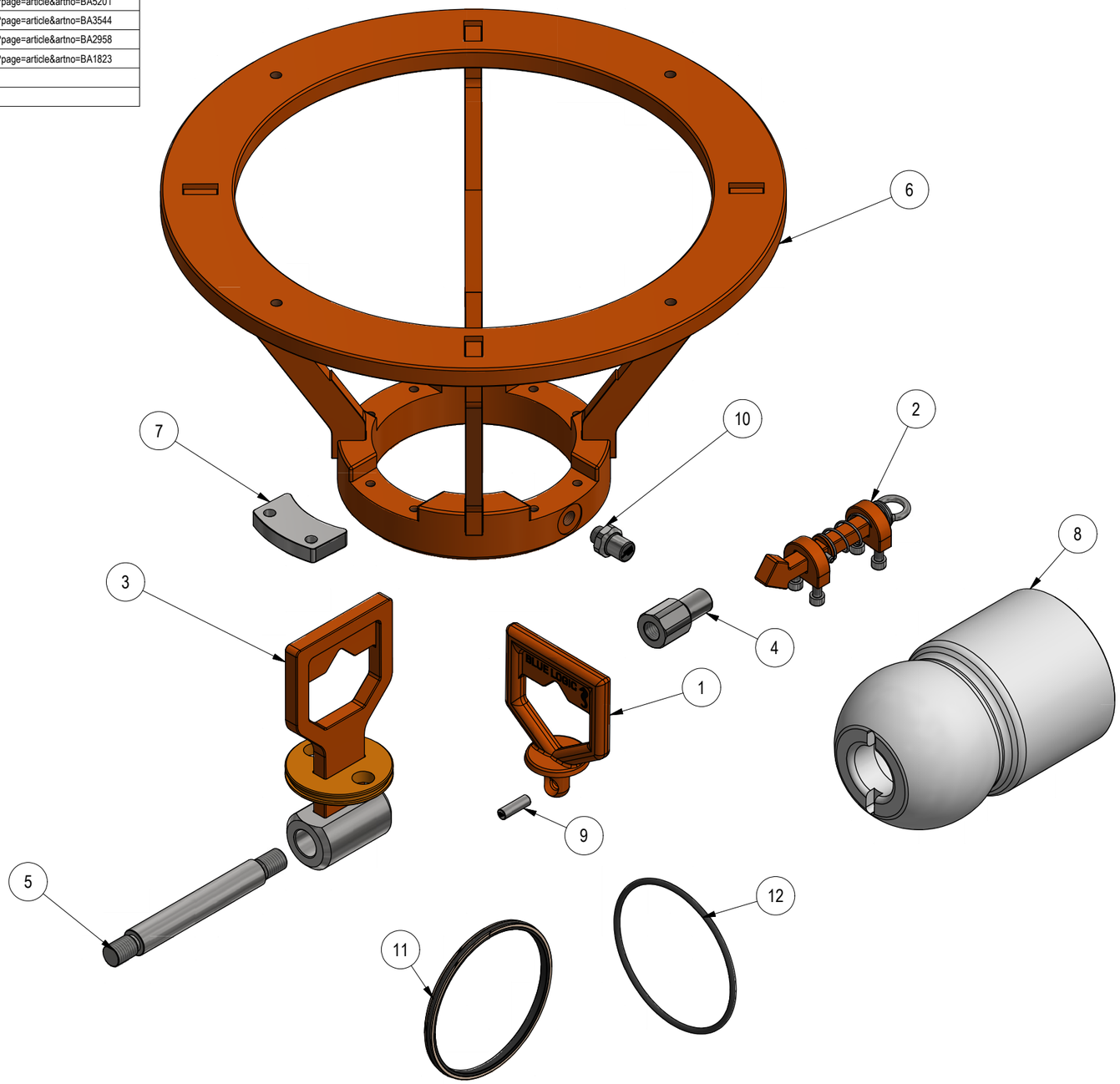

NOTE: 1
DESIGN CODE:
N/A

NOTE: 2
TECHNICAL CLASSIFICATION:

Article Type:	001-Hot Stabs
Main Group:	1.00. Misc Hot Stab
Intermediate Group:	1.51.09. Spares
Sub Group:	1.51.152.05. Service Parts

NOTE: 3
INTERFACE INFORMATION:

Pressure Rating Bar:	N/A
Design Water Depth:	N/A
Material:	N/A
Weight:	34,4 kg
Volume:	6,61 dm^3
Submerged Weight:	27,65 kg
Surface Area:	8853 cm^2
Hydraulic:	N/A
Mechanical:	N/A
Electrical:	N/A
Com. & Protocol:	N/A

NOTE: 4
ADDITIONAL INFORMATION:
List of parts that can be maintained by certified personel, during service.

Rev.	Date	Reason for issue	Revision change	Made	Chk'd	Appr.
01	12.12.2017	8-ASB (As-Built)		WTJ	HNJ	WTJ

BLUE LOGIC

Dwg Scale:
Dwg Proj:
Dwg Format: A3

Drawing title: Ø150 Stab Service Part Overview

Drawing number: BB1039

Rev. 01